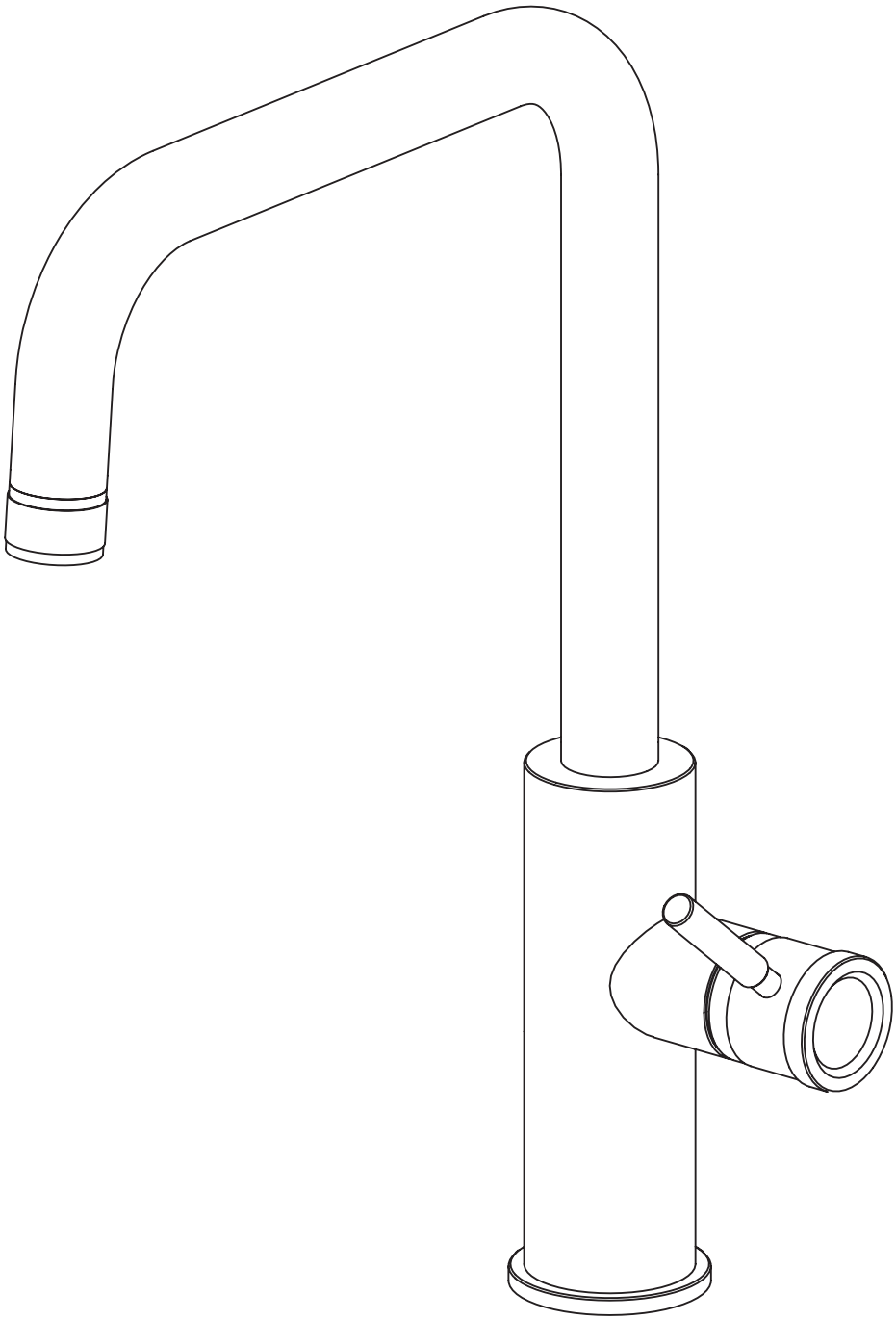

0280105X

KITCHEN MIXER, SQUARE SPOUT

Super Inox Srl - Via dell'Industria 19 C/D, 28924 Verbania (VB) Italia - Phone +39 0323 586546 - info@superinox.eu - www.superinox.eu
This drawing is property of Super Inox Srl. All rights reserved.

KITCHEN
0280105X

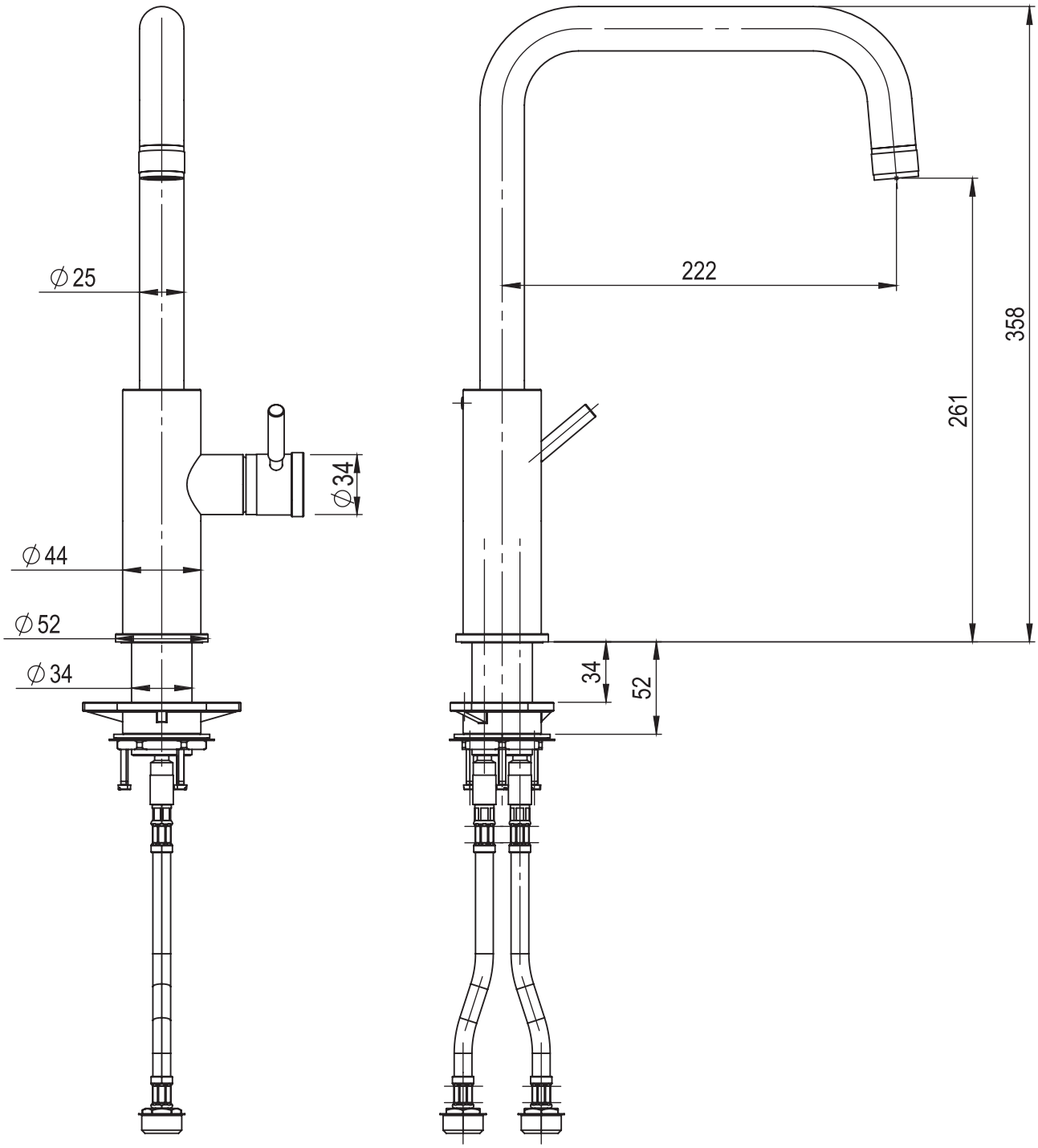

This drawing is property of Super Inox Srl. All rights reserved.