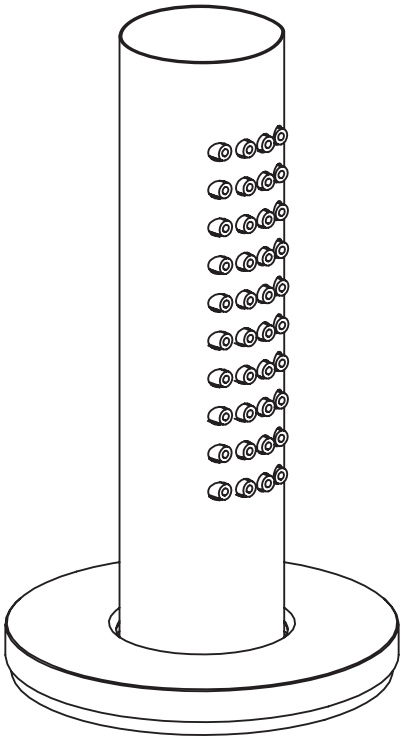

0251312X

DECK - MOUNT SHOWER SET

Super Inox Srl - Via dell'Industria 19 C/D, 28924 Verbania (VB) Italia - Phone +39 0323 586546 - info@superinox.eu - www.superinox.eu
This drawing is property of Super Inox Srl. All rights reserved.

CAVE
0251312X

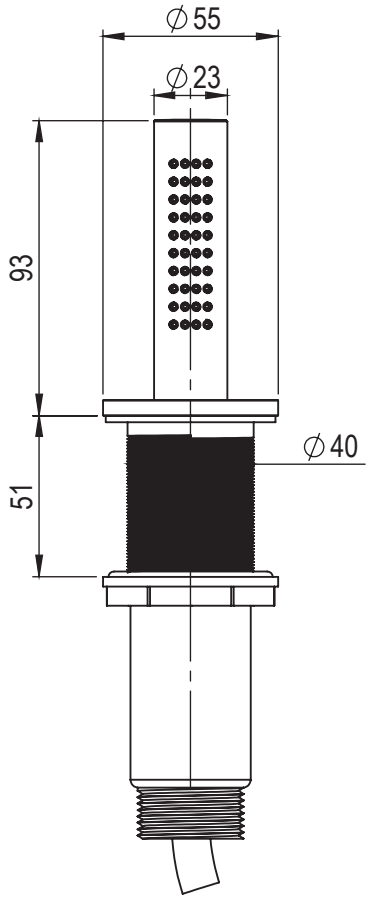

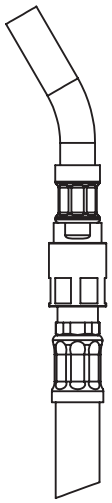

This drawing is property of Super Inox Srl. All rights reserved.