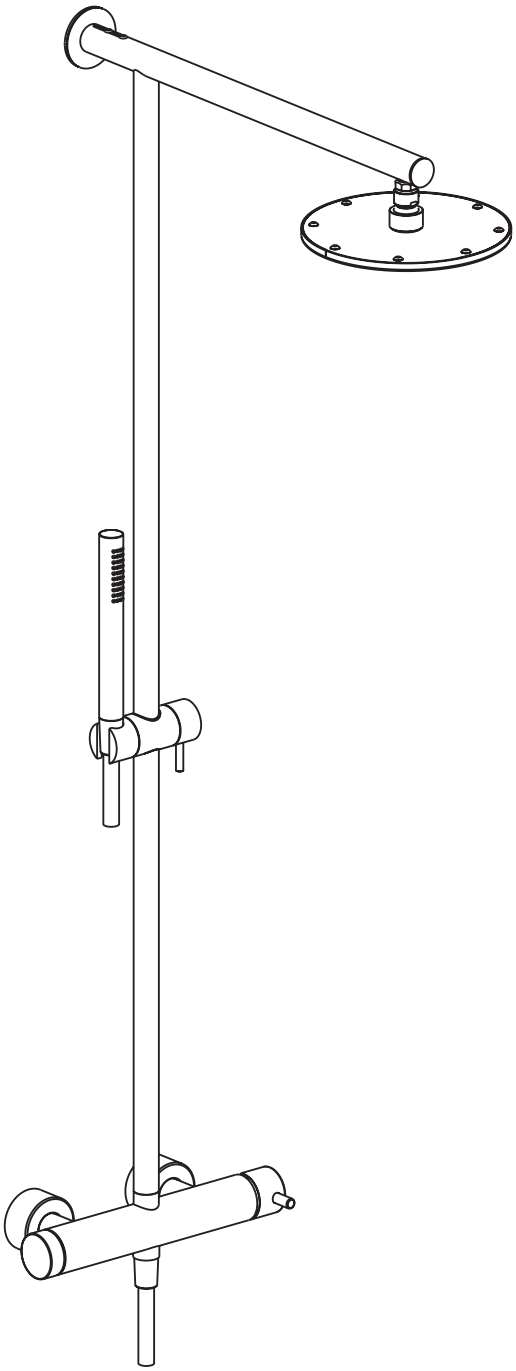

0031157X

SHOWER COLUMN WITH HAND SHOWER

Super Inox Srl - Via dell'Industria 19 C/D, 28924 Verbania (VB) Italia - Phone +39 0323 586546 - info@superinox.eu - www.superinox.eu
This drawing is property of Super Inox Srl. All rights reserved.

DMB
0031157X

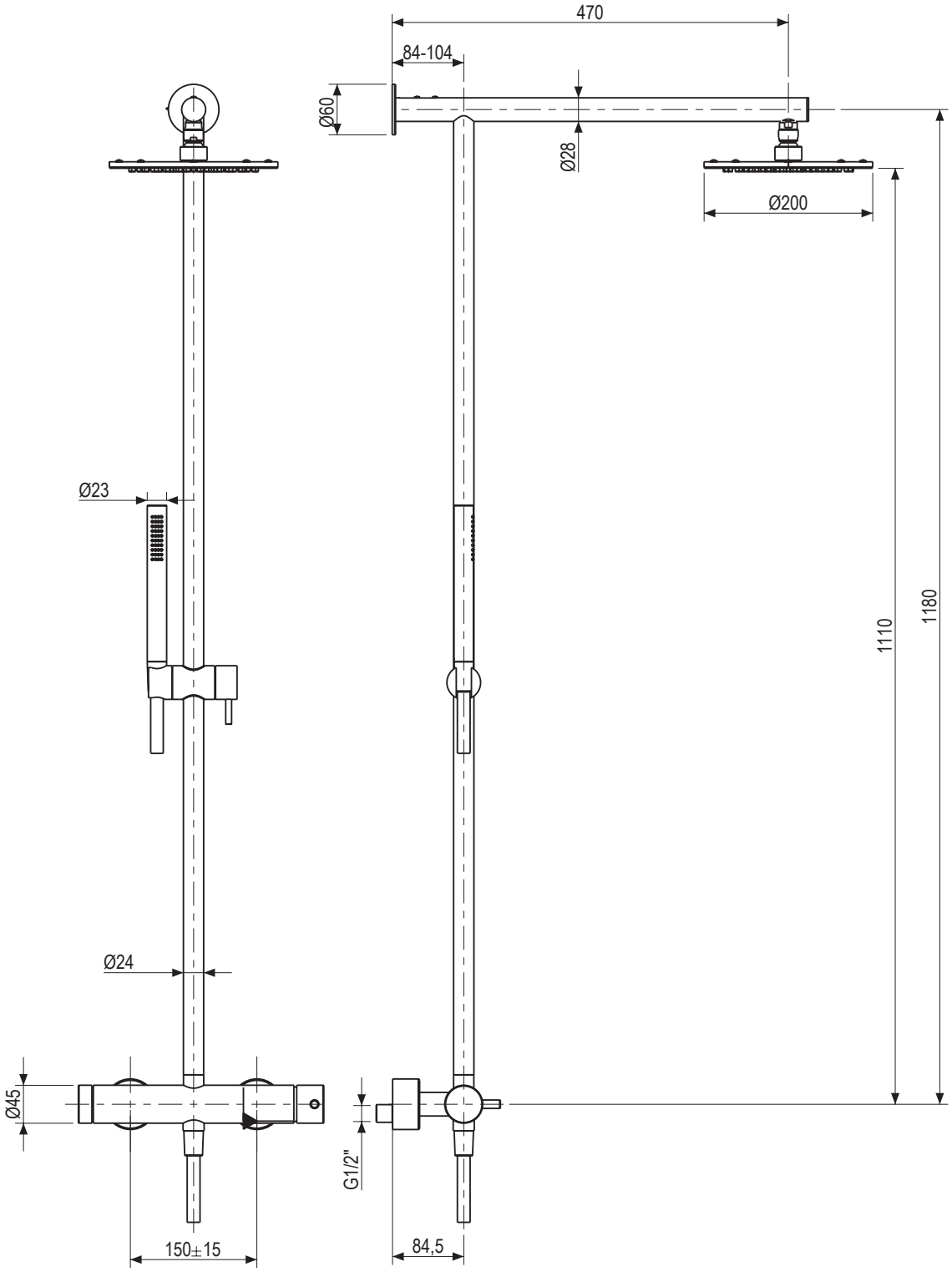

This drawing is property of Super Inox Srl. All rights reserved.