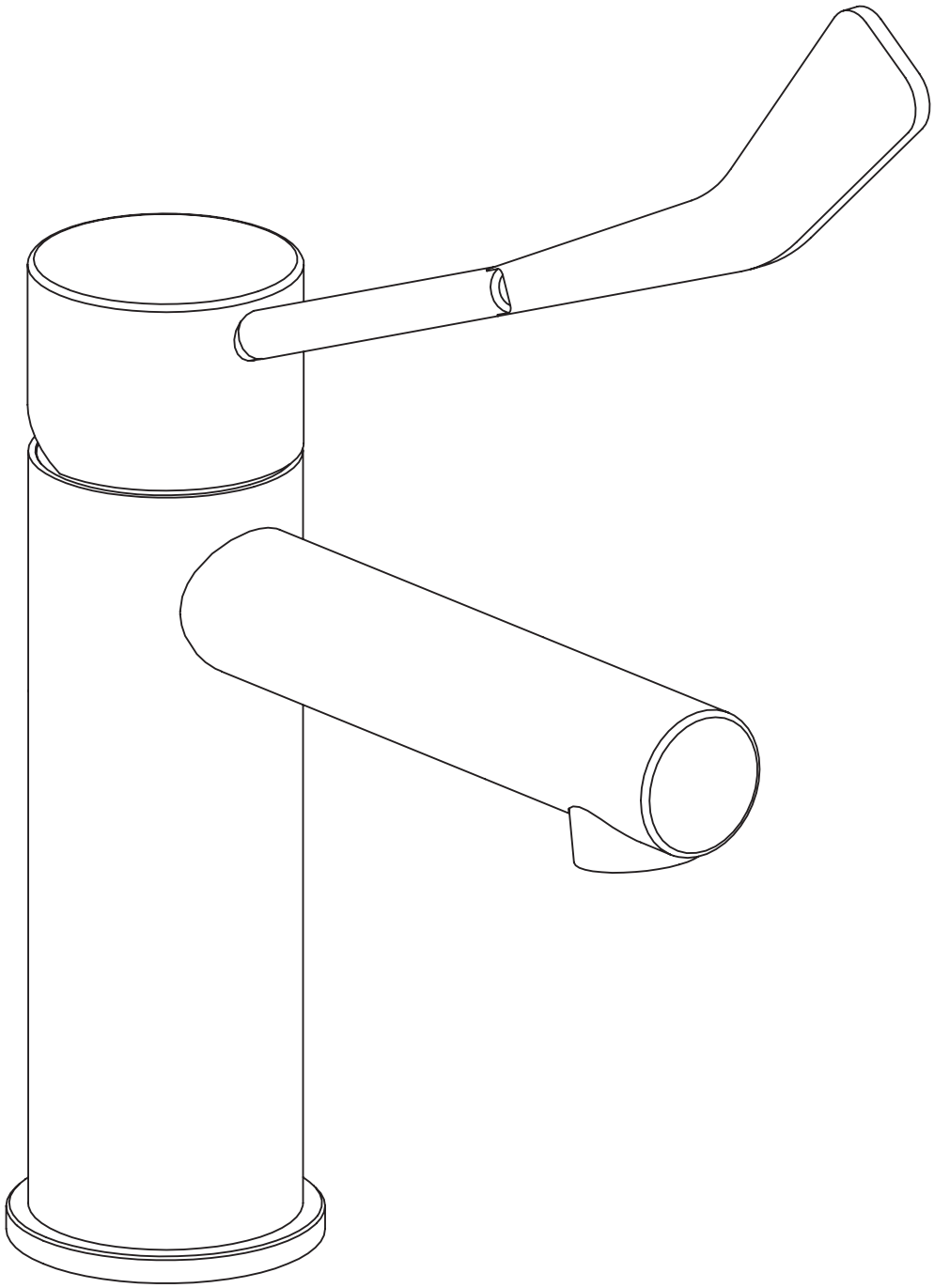

0031022X

WASHBASIN MIXER W/O WASTE CLINICAL LEVER

Super Inox Srl - Via dell'Industria 19 C/D, 28924 Verbania (VB) Italia - Phone +39 0323 586546 - info@superinox.eu - www.superinox.eu
This drawing is property of Super Inox Srl. All rights reserved.

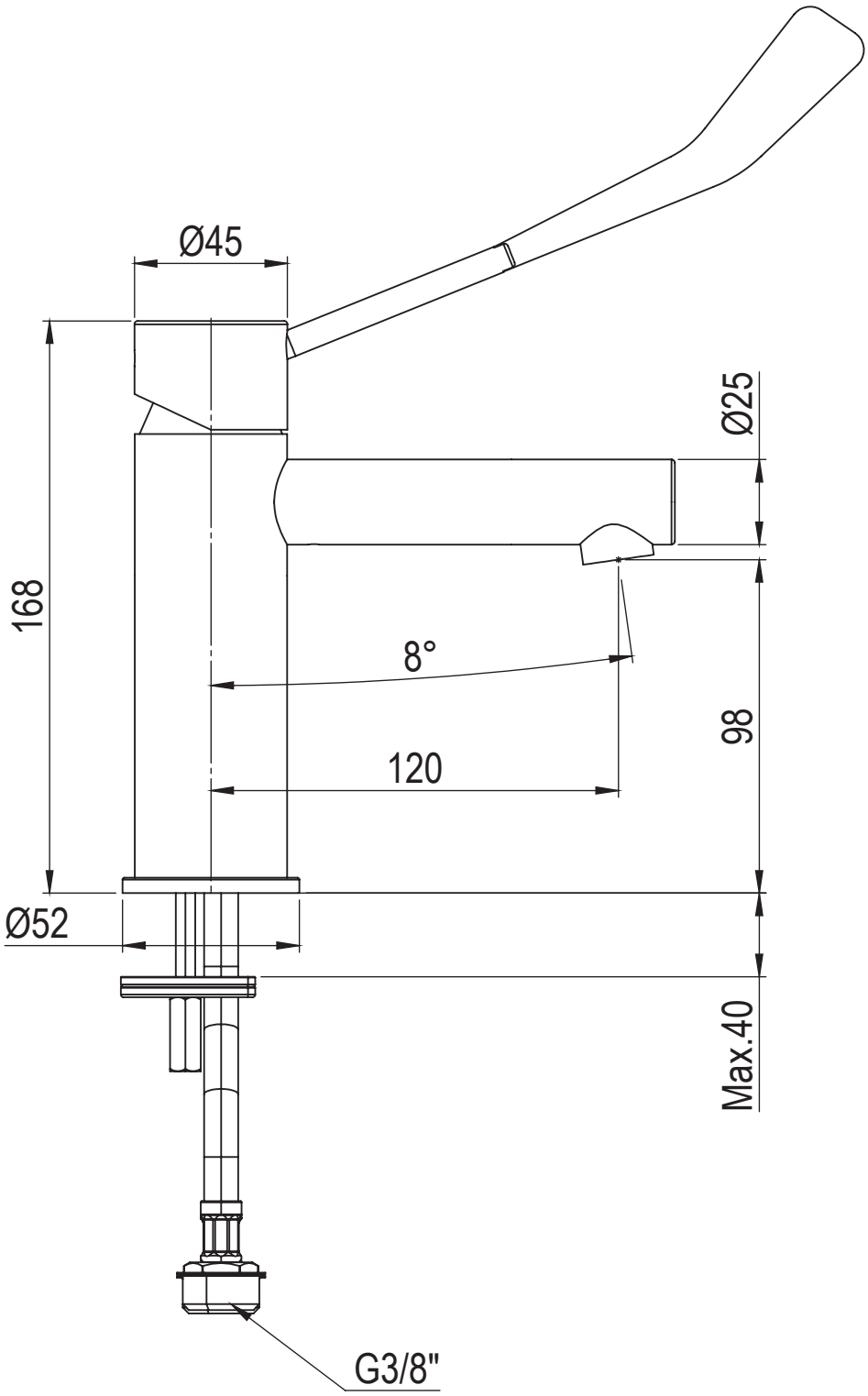

This drawing is property of Super Inox Srl. All rights reserved.