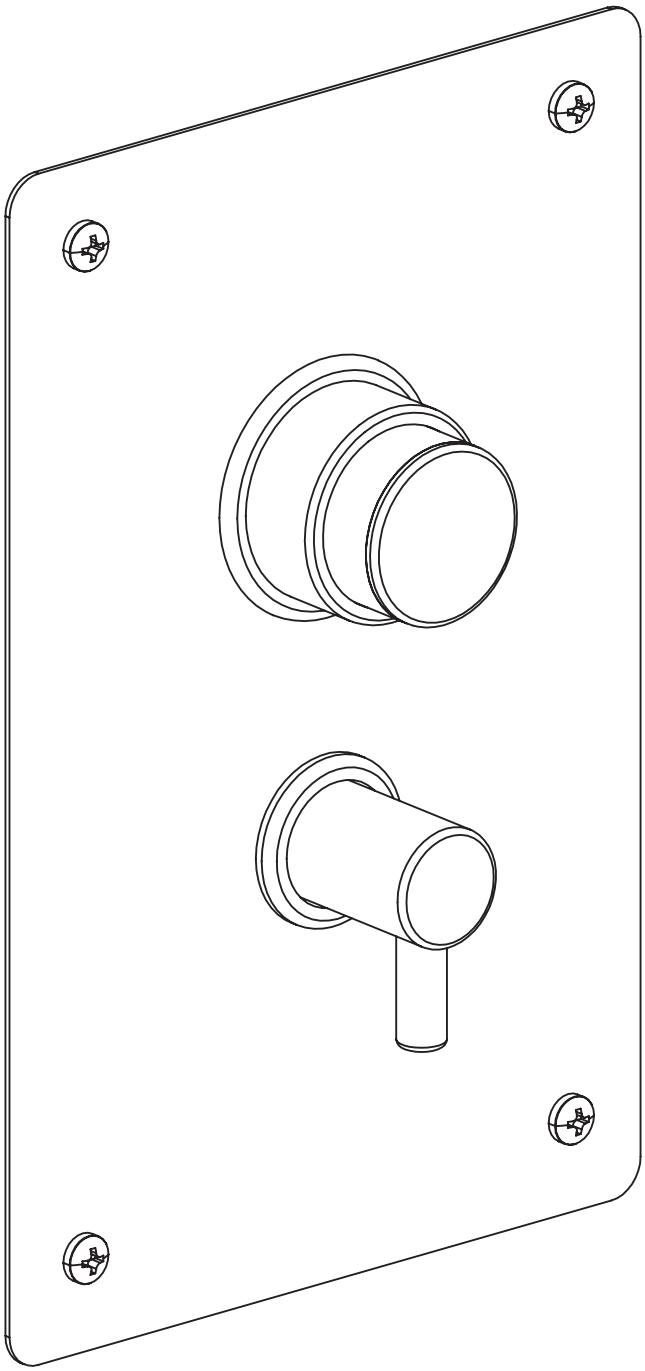

0411246X

BUILT - IN TEMPORIZED TAP W / MIXER

Super Inox Srl - Via dell'Industria 19 C/D, 28924 Verbania (VB) Italia - Phone +39 0323 586546 - info@superinox.eu - www.superinox.eu
This drawing is property of Super Inox Srl. All rights reserved.

0411246X

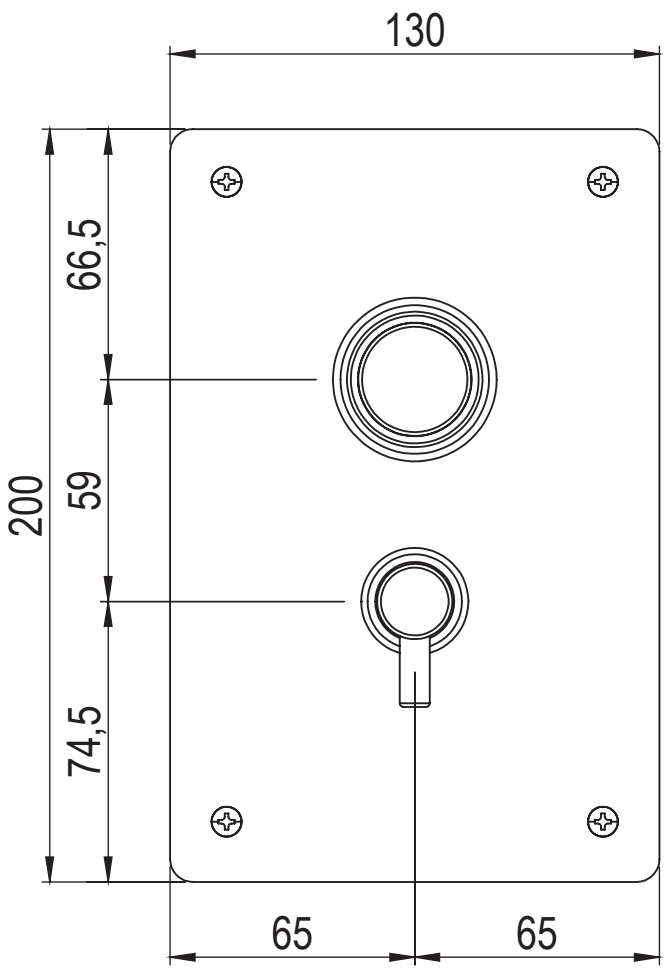

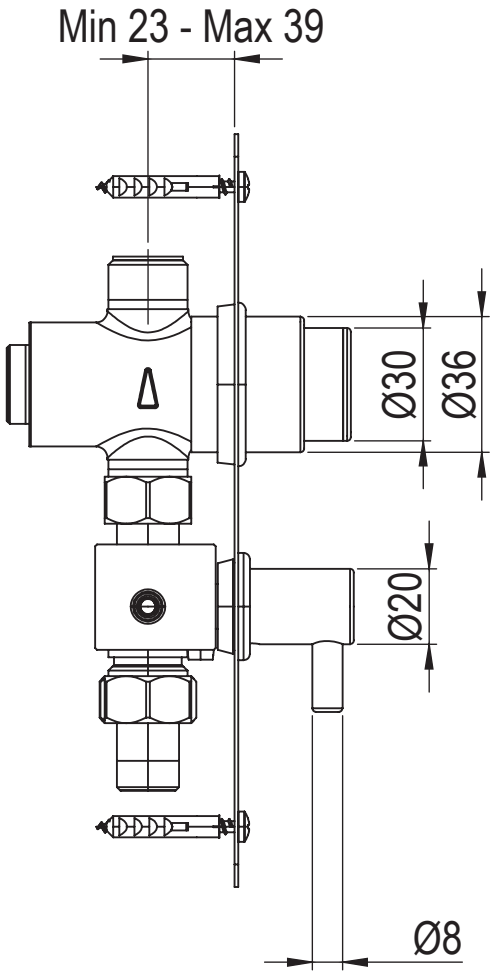

Super Inox Srl - Via dell'Industria 19 C/D, 28924 Verbania (VB) Italia - Phone +39 0323 586546 - info@superinox.eu - www.superinox.eu
This drawing is property of Super Inox Srl. All rights reserved.