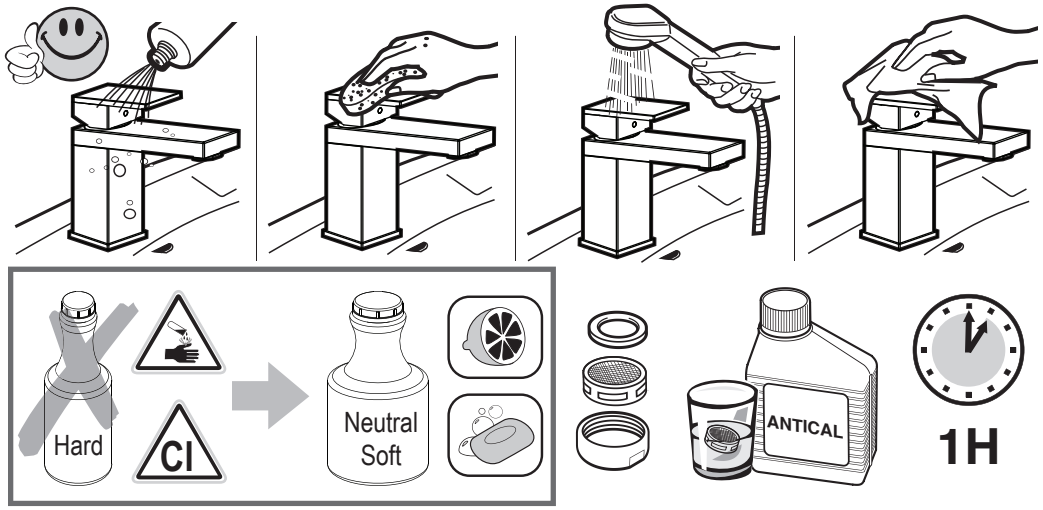
Hard
Cl
Neutral
Soft
ANTICAL
1H
MAX.
5
0,5
bar
3
1
bar
°C
80°
MAX
65
45

SUPER®
INOX

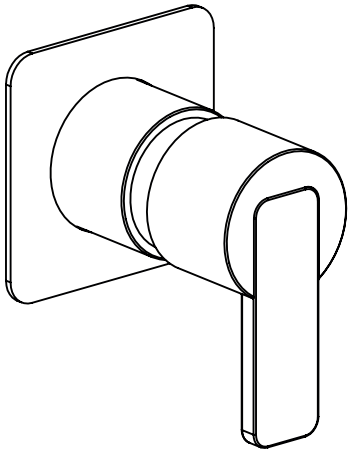

A

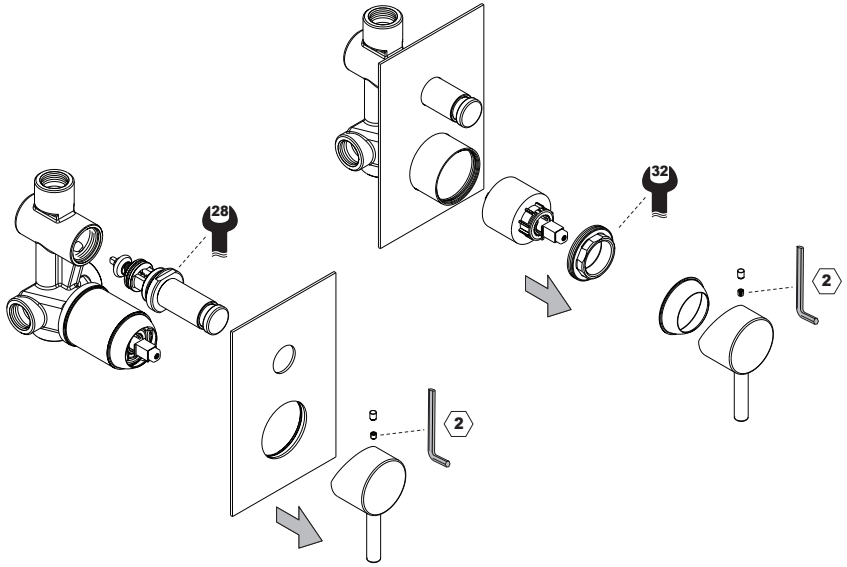
28
32
2
2

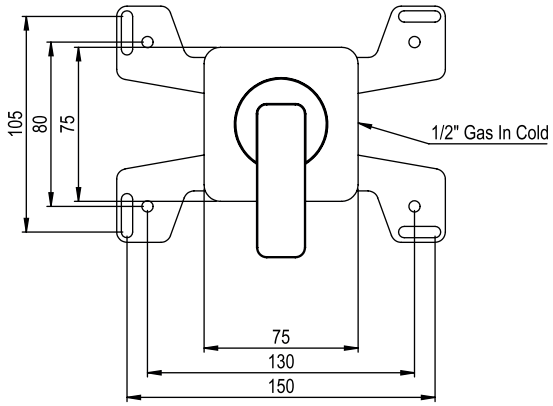
105
80
75
1/2" Gas In Cold
75
130
150

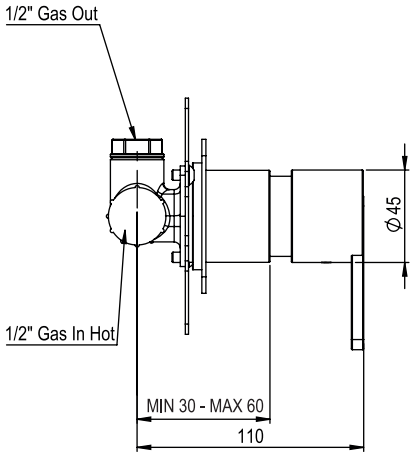
1/2" Gas Out
Ø45
1/2" Gas In Hot
MIN 30 - MAX 60
110

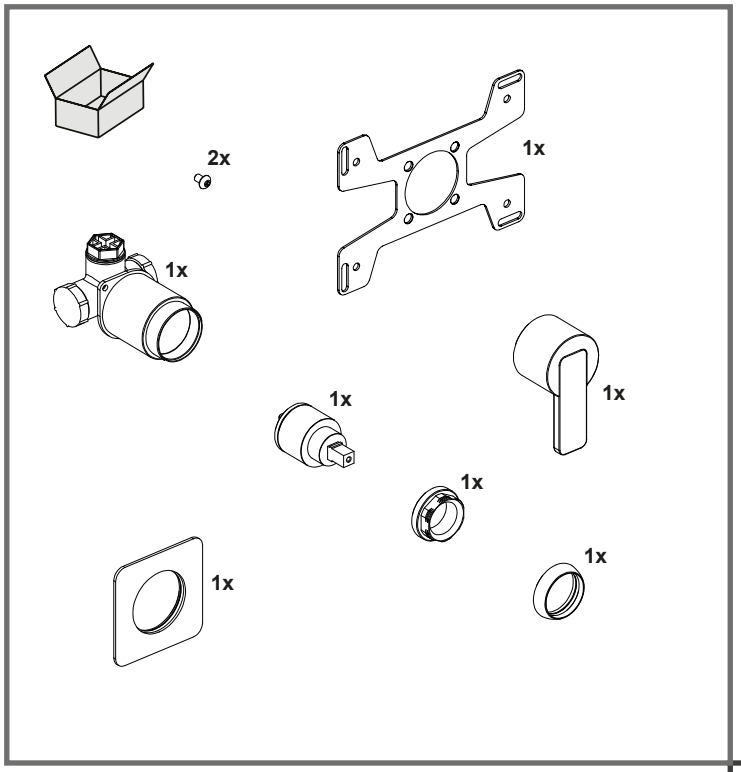

1

2

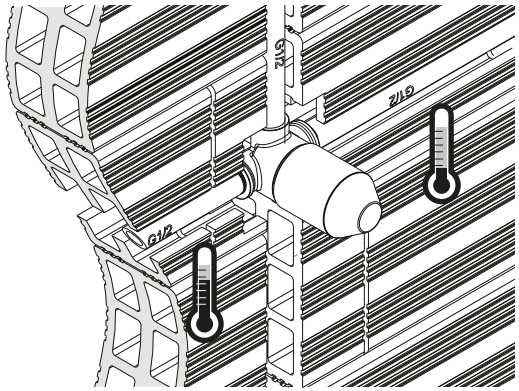

3

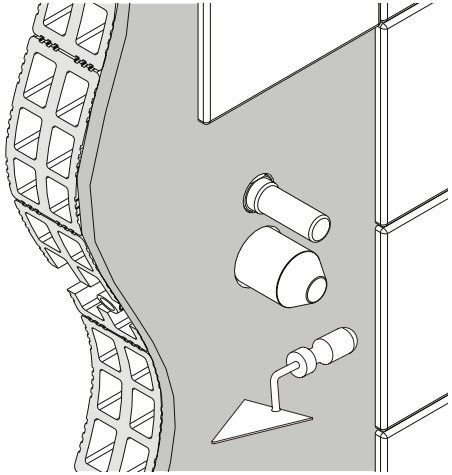

4

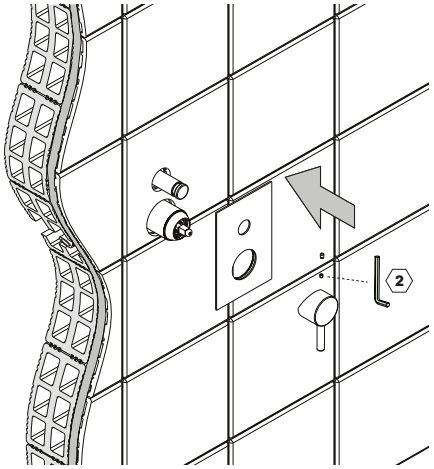
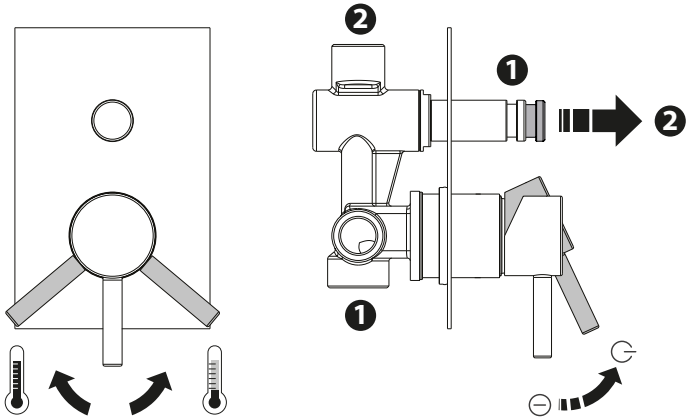
5