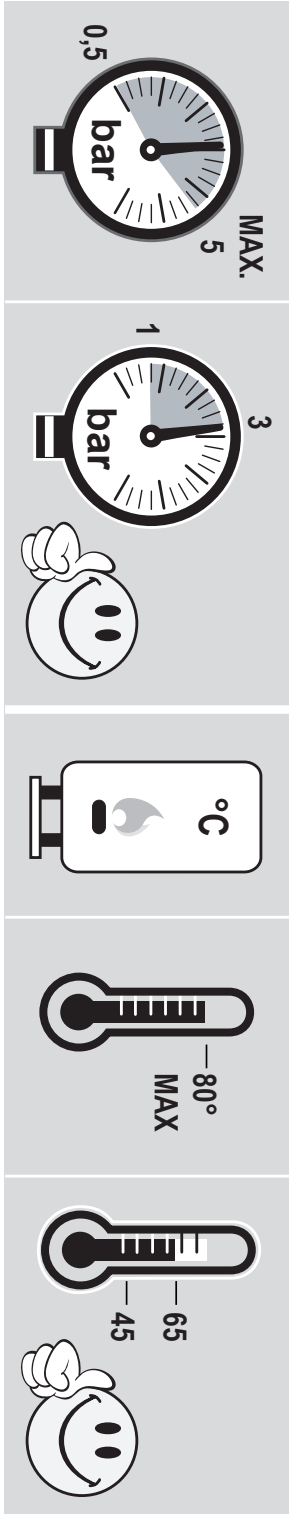

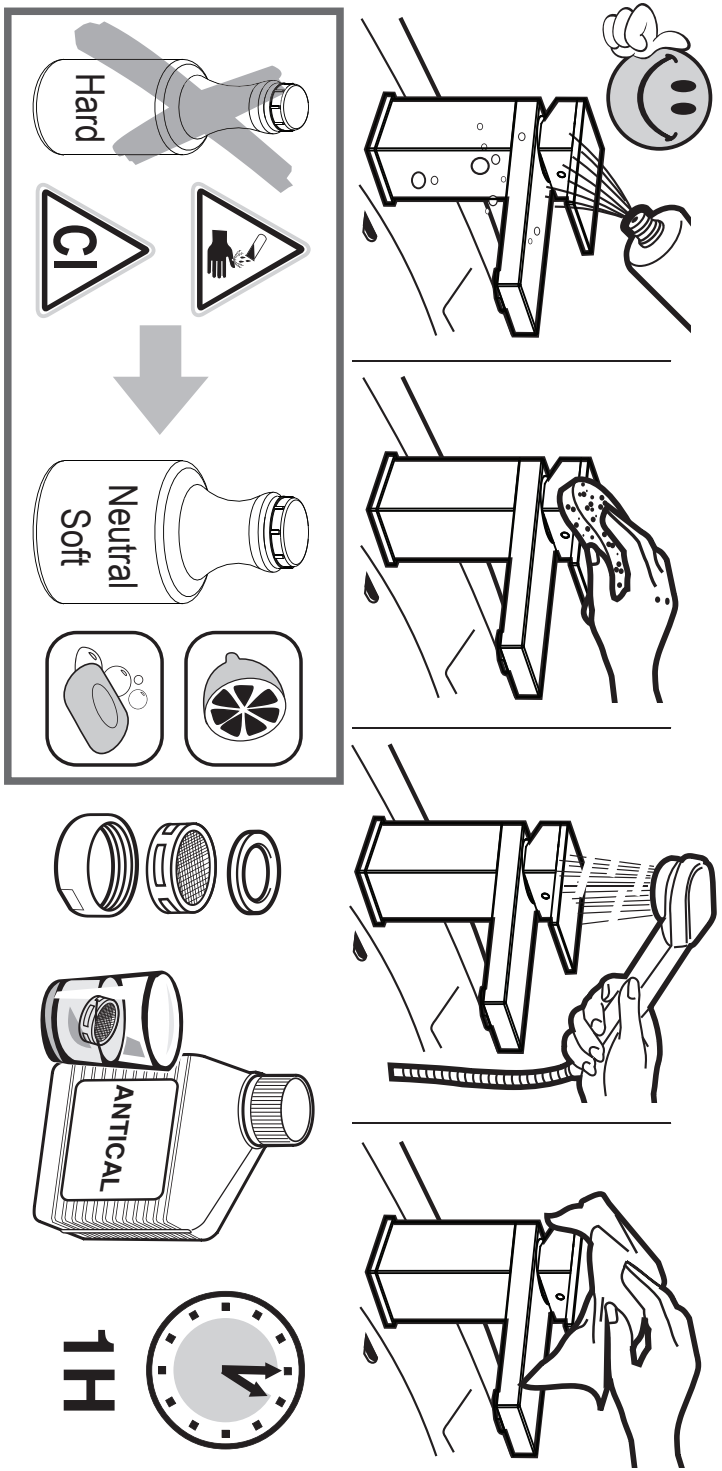

SUPER®
INOX

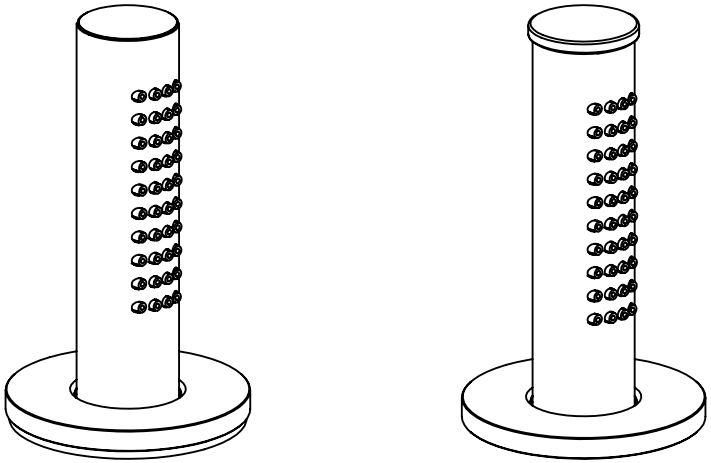

Made in Italy

0251312X

0281312X

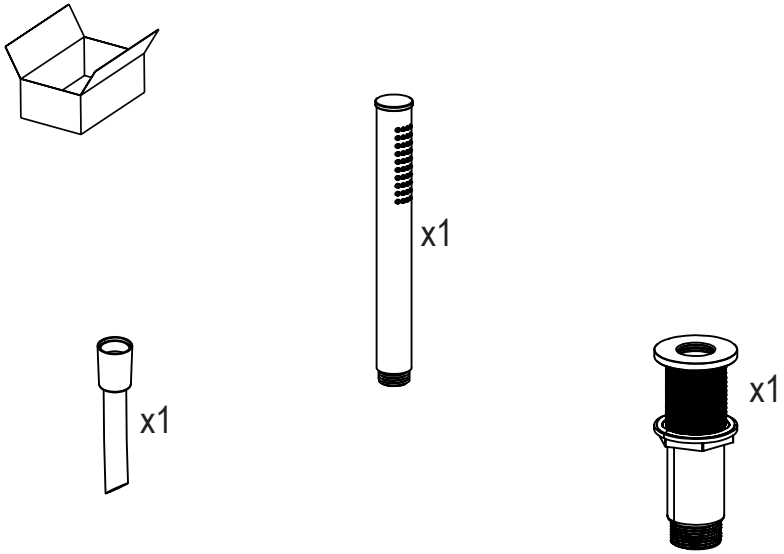

1

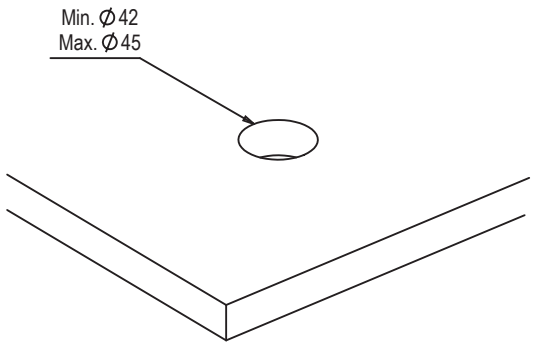

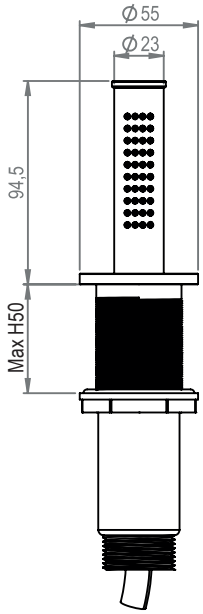
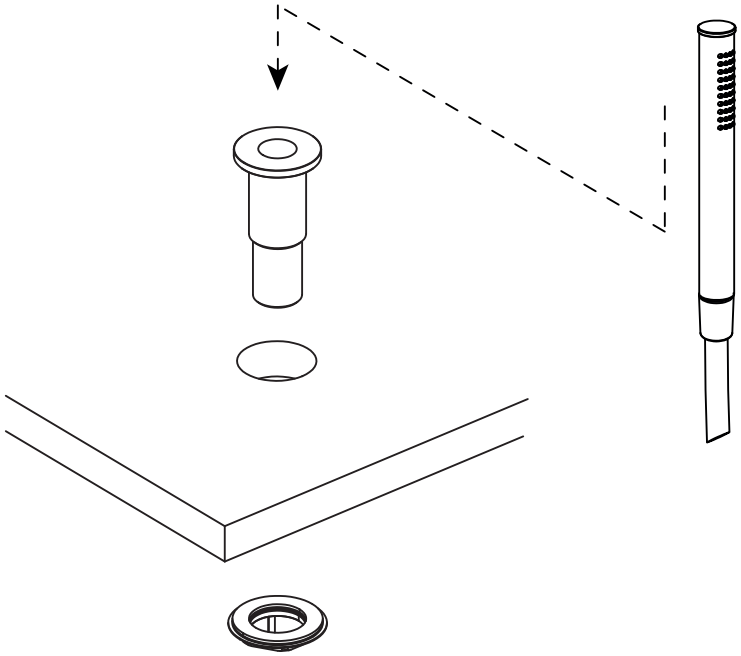
2