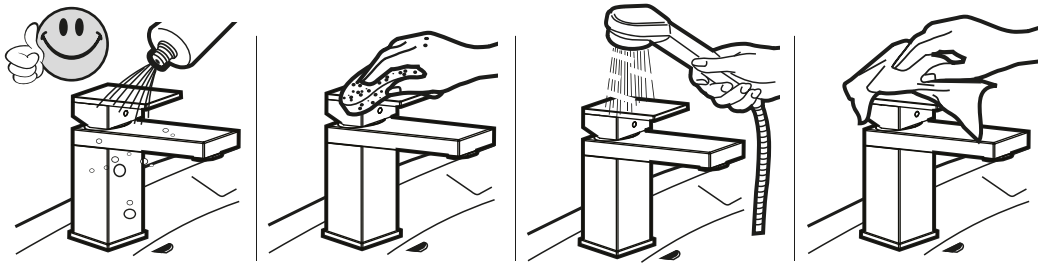

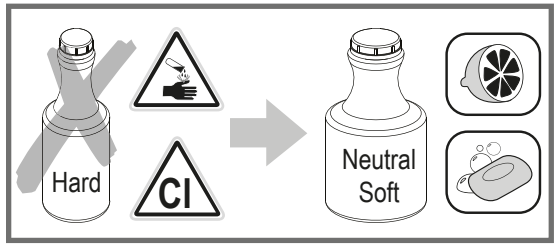

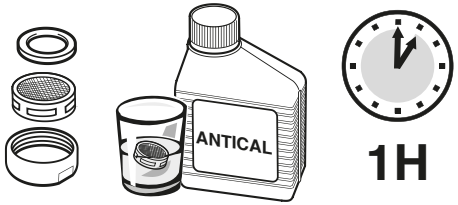

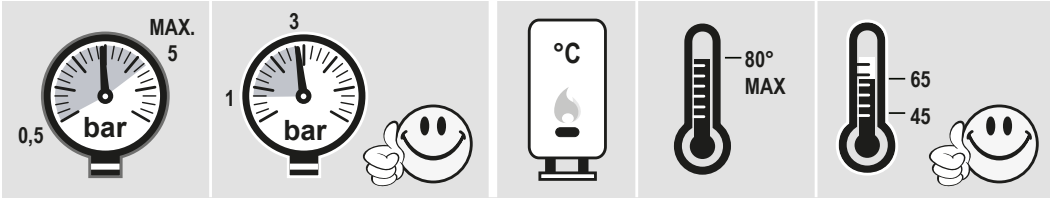

SUPER® INOX

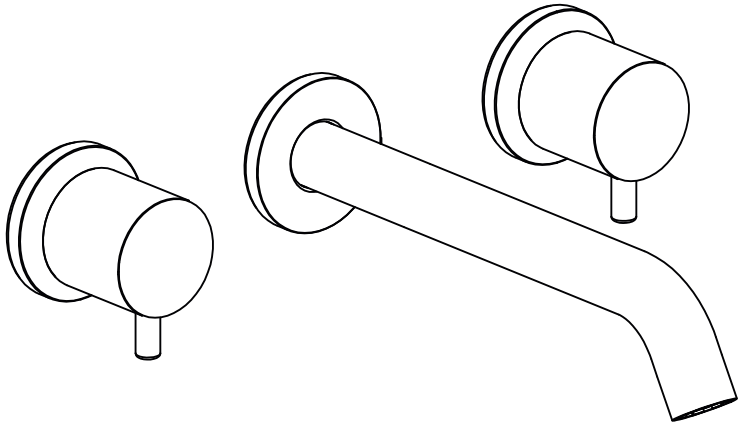

A

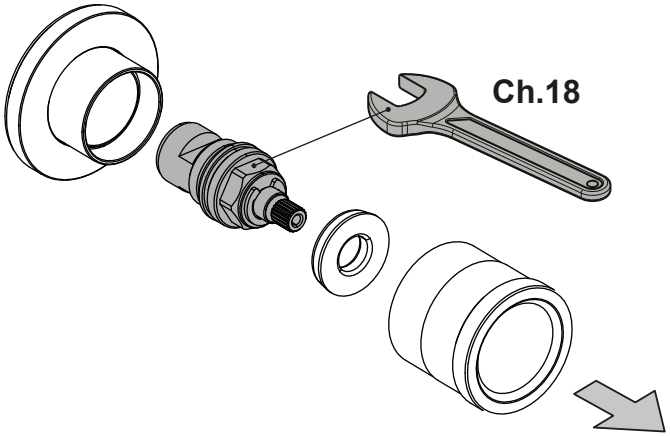

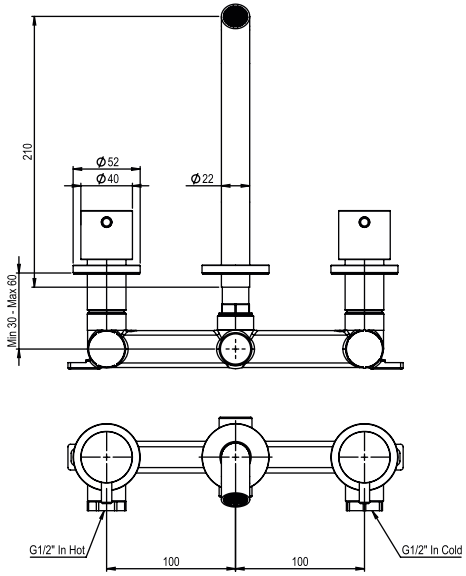

MADE IN ITALY

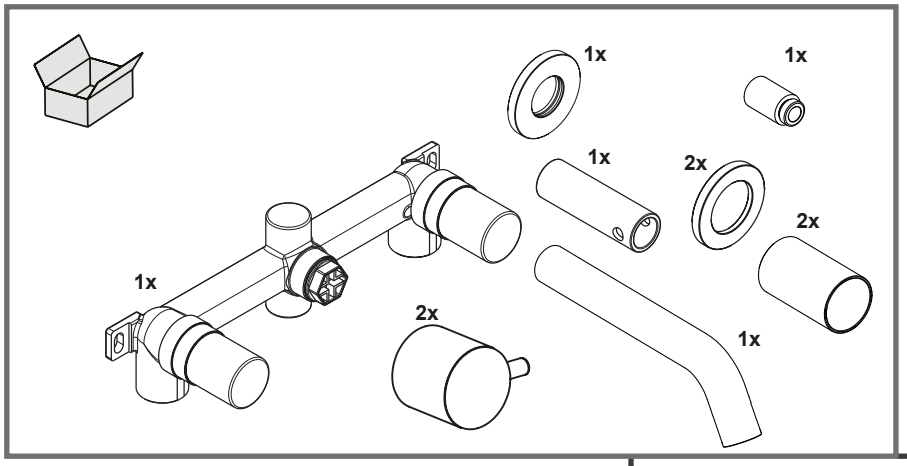
1x
1x
1x
2x
2x
1x
2x
1x

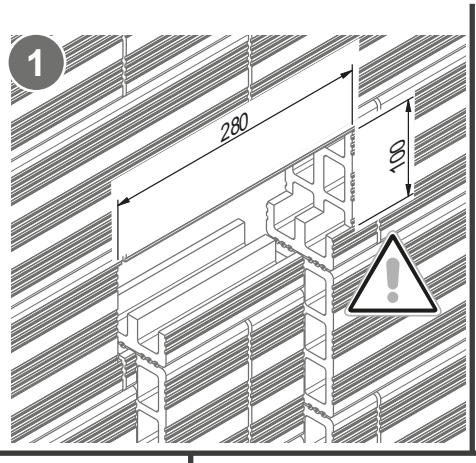
1
280
100

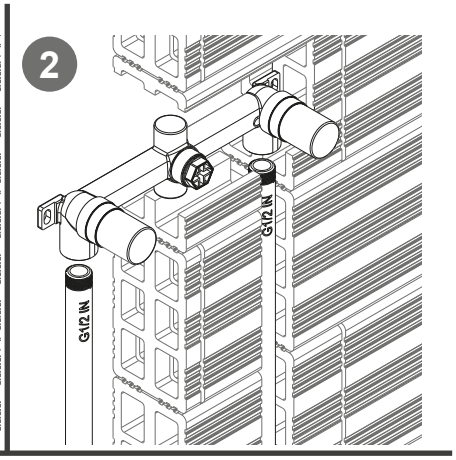
2
G1/2 IN
G1/2 IN

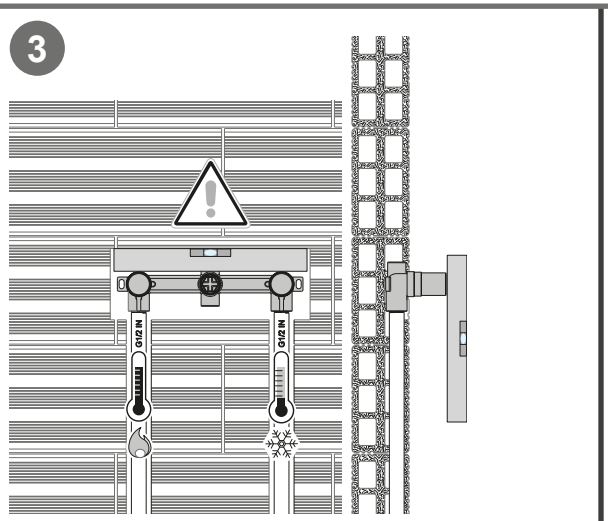
3
G1/2 IN
G1/2 IN

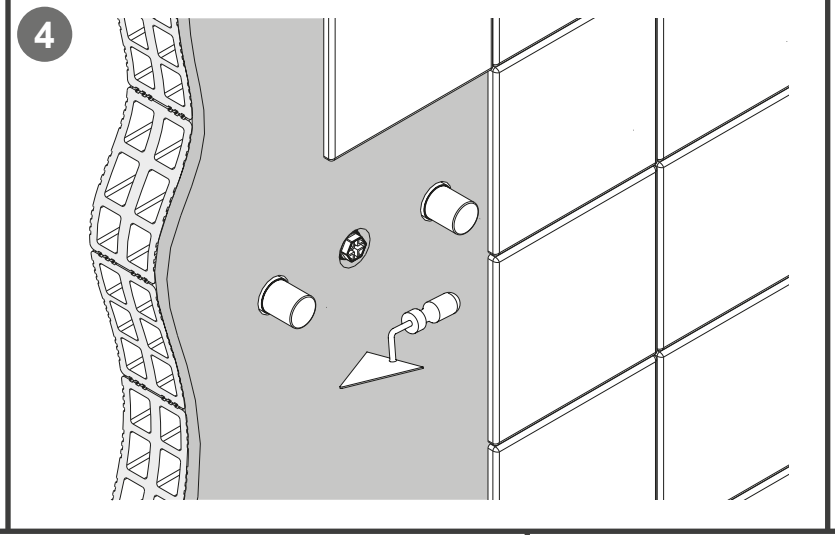
4

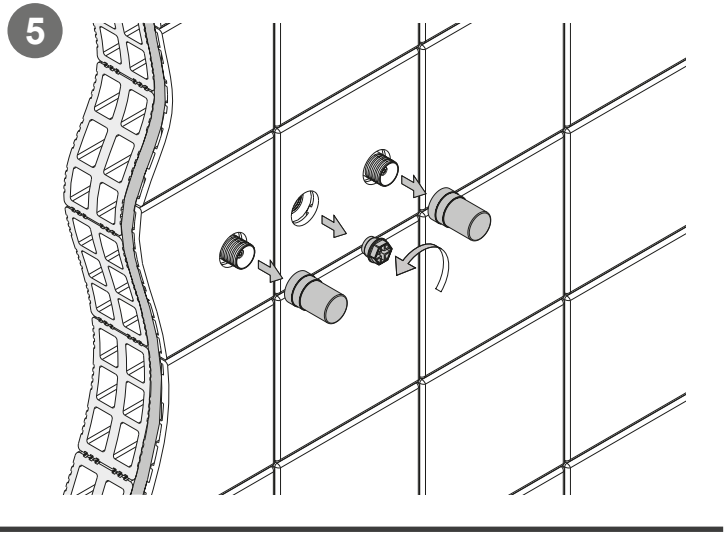
5

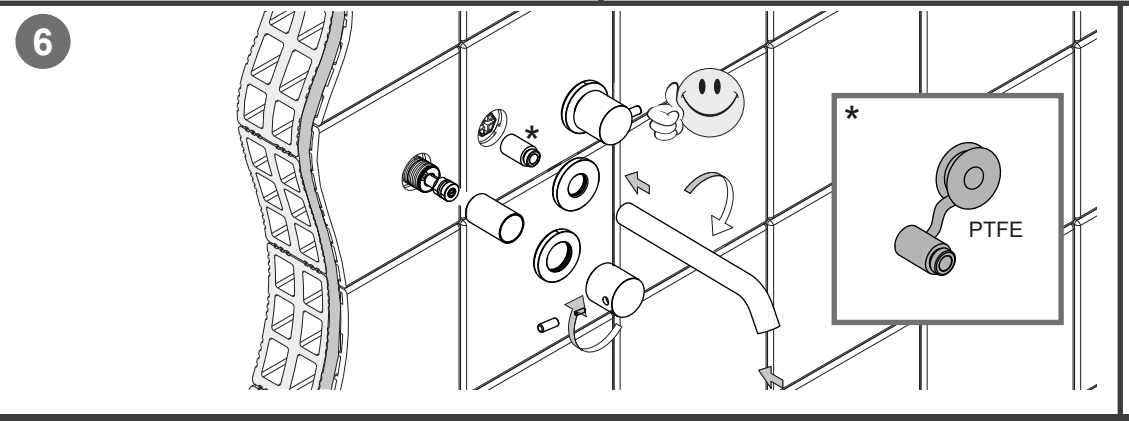
6
*
*
PTFE

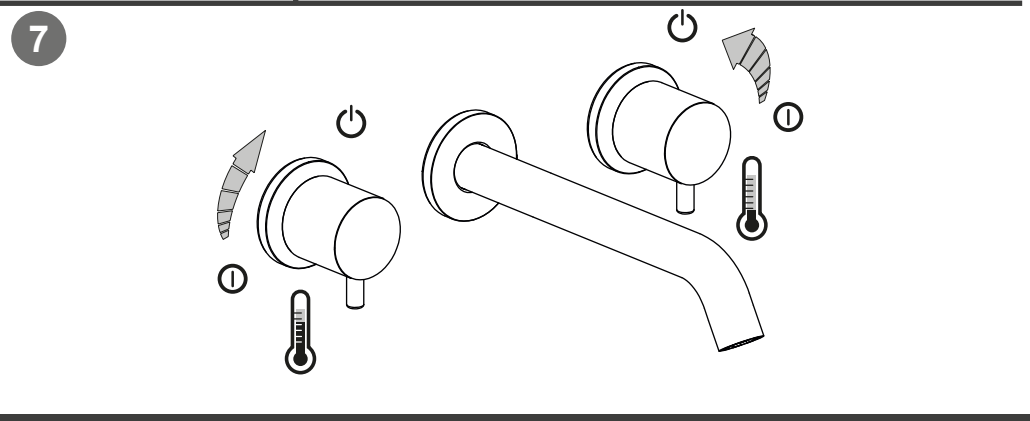
7

SUPER® INOX