SUPER®
INOX

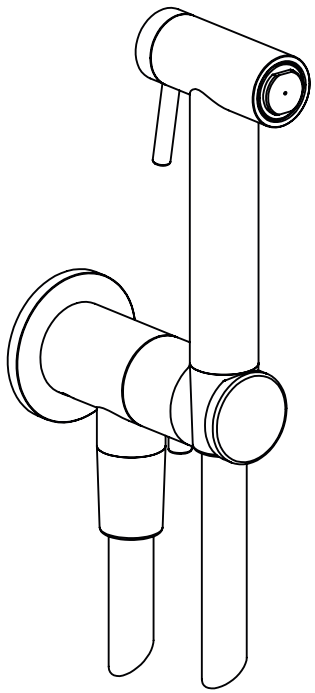

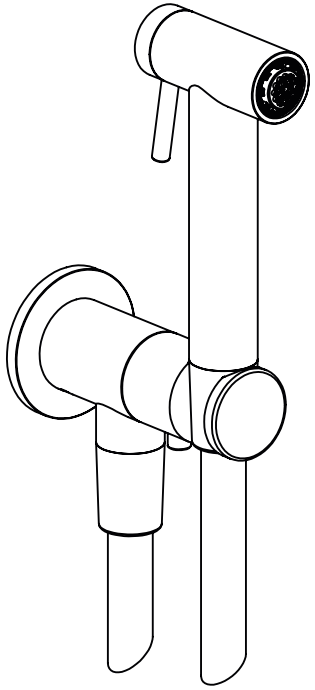

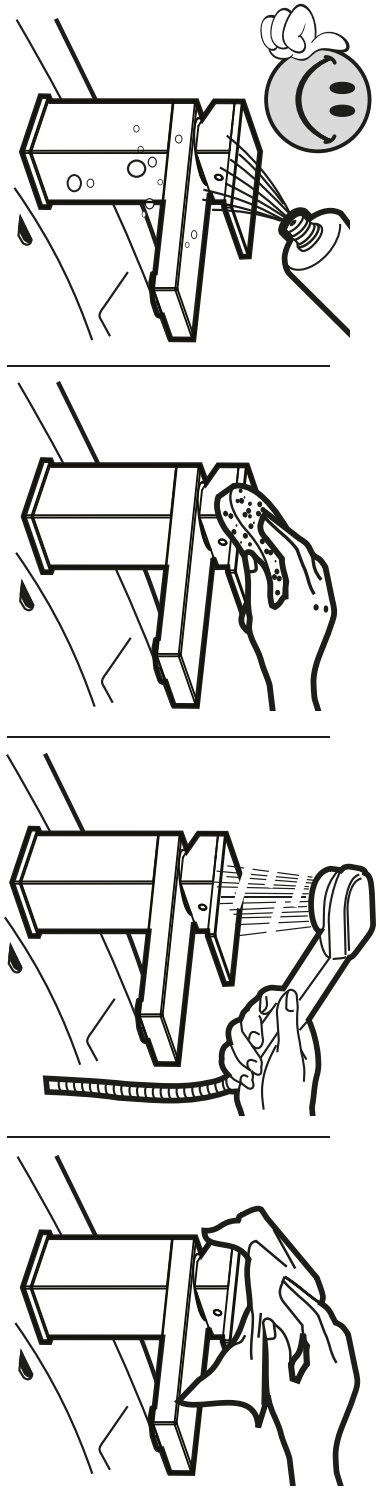

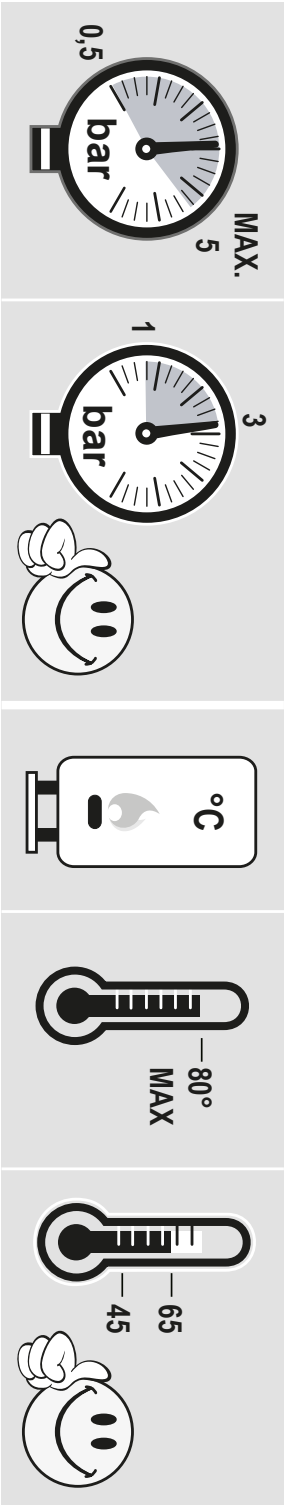

Made in Italy

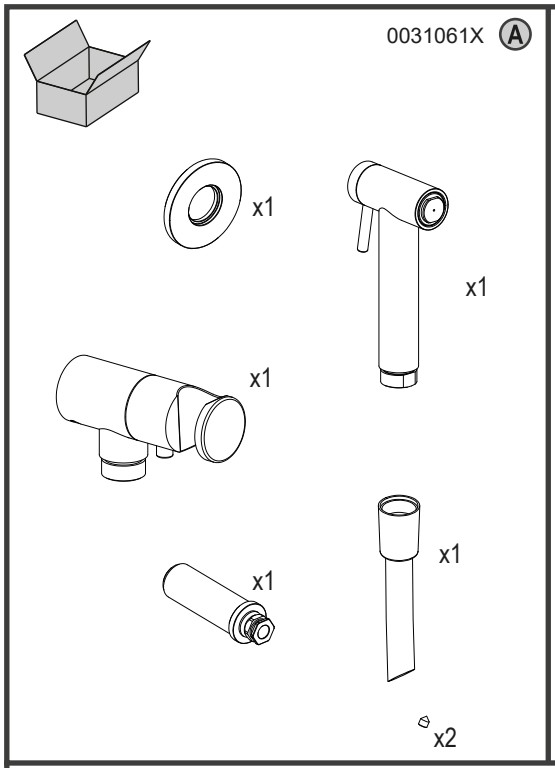
0031061X A
x1
x1
x1
x1
x1
x2

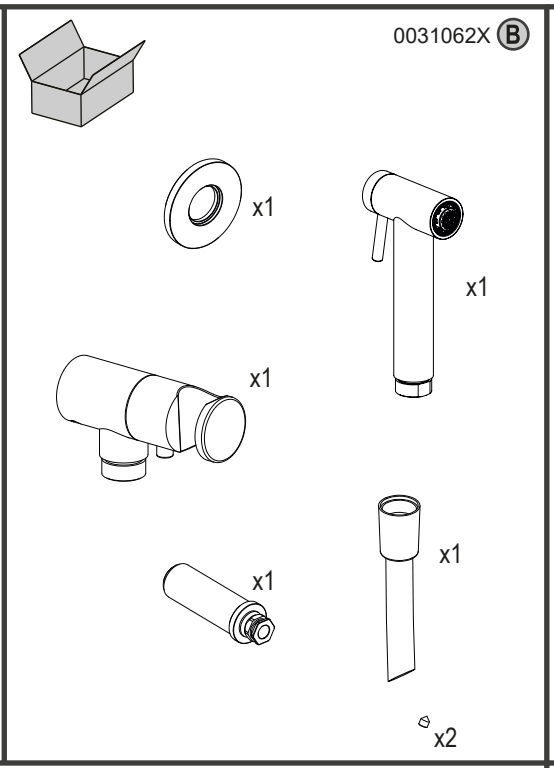
0031062X B
x1
x1
x1
x1
x1
x2

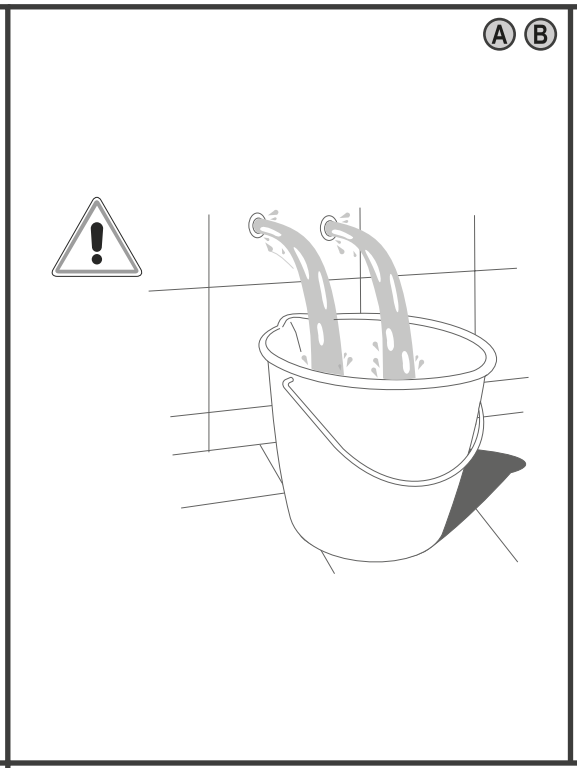
A B

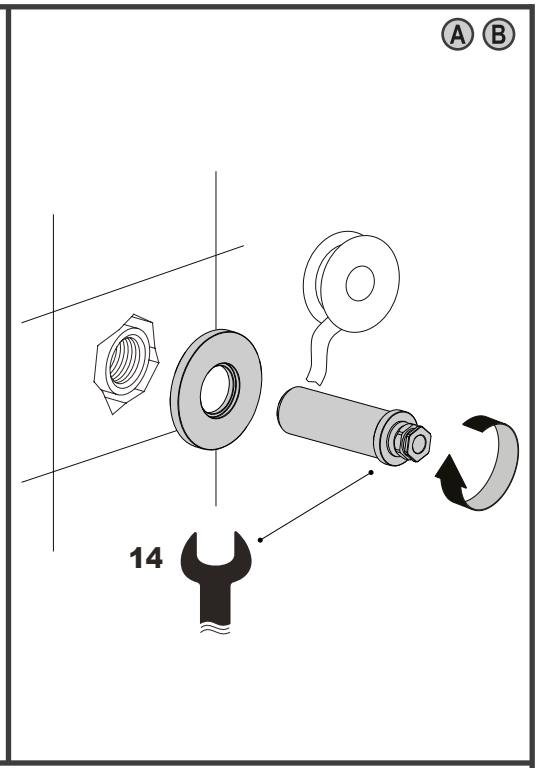
A B
14

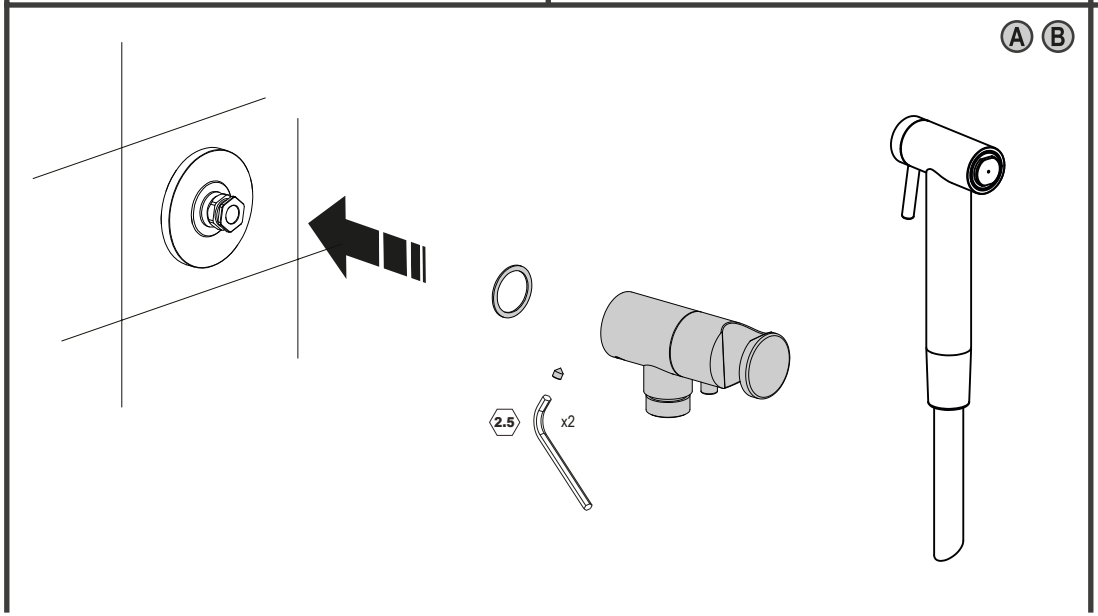
A B
2.5
x2

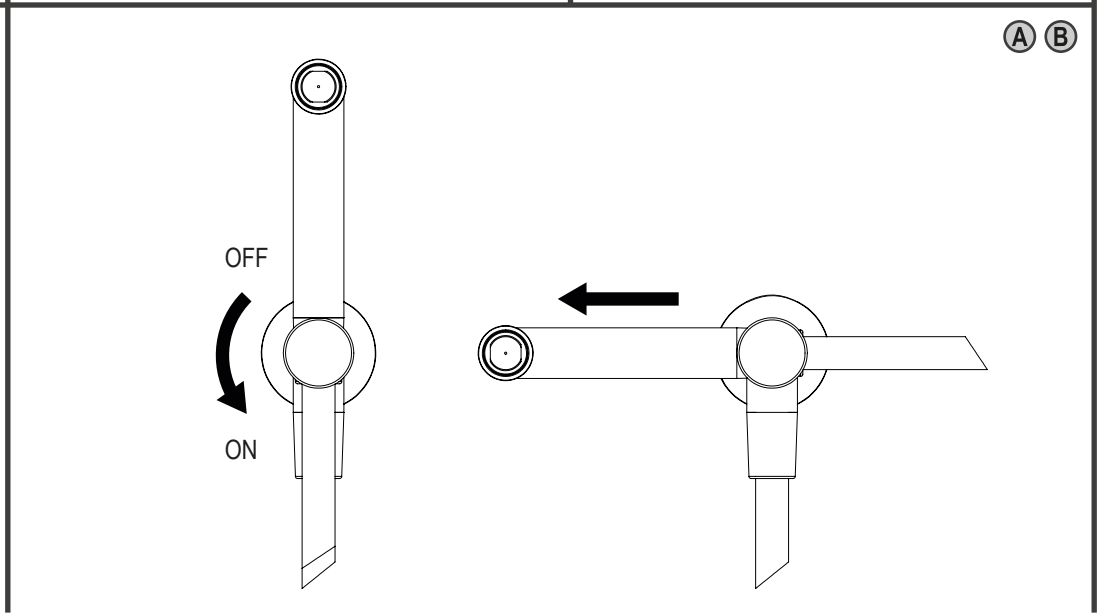
A B
OFF
ON

SUPER® INOX