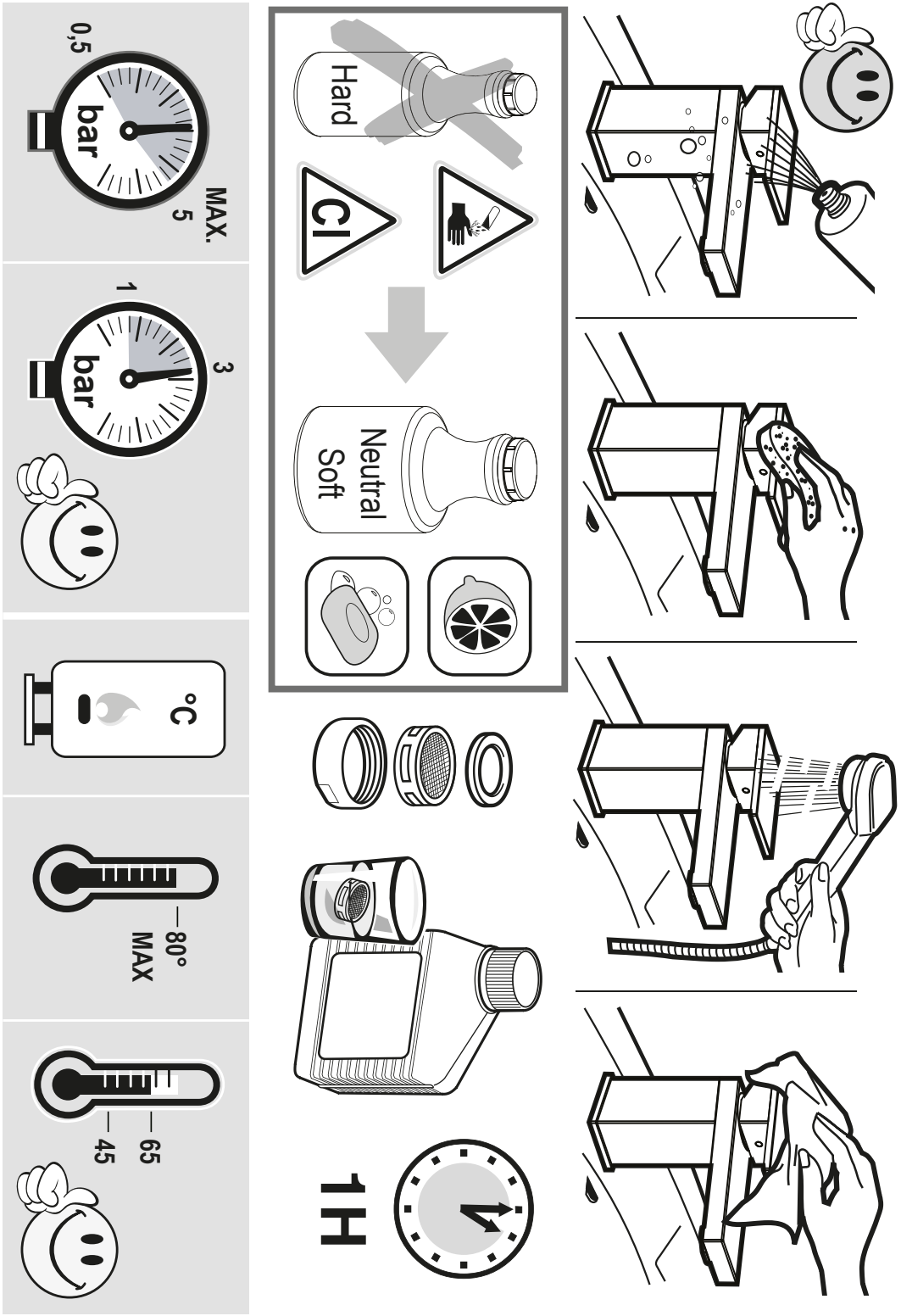

SUPER®
INOX

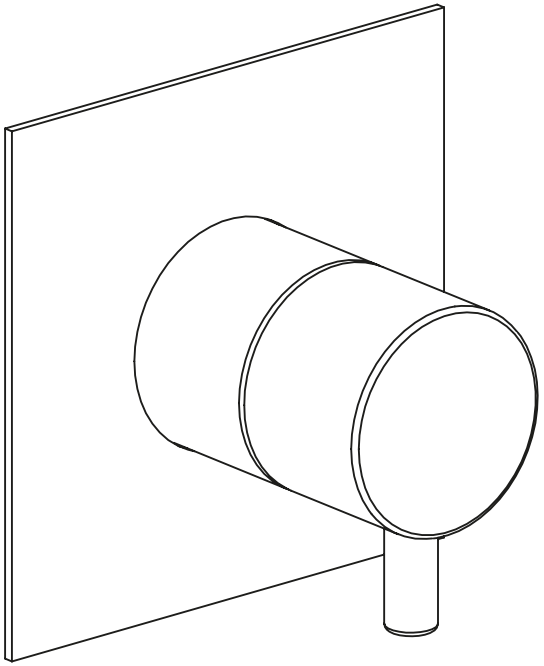

Made in Italy

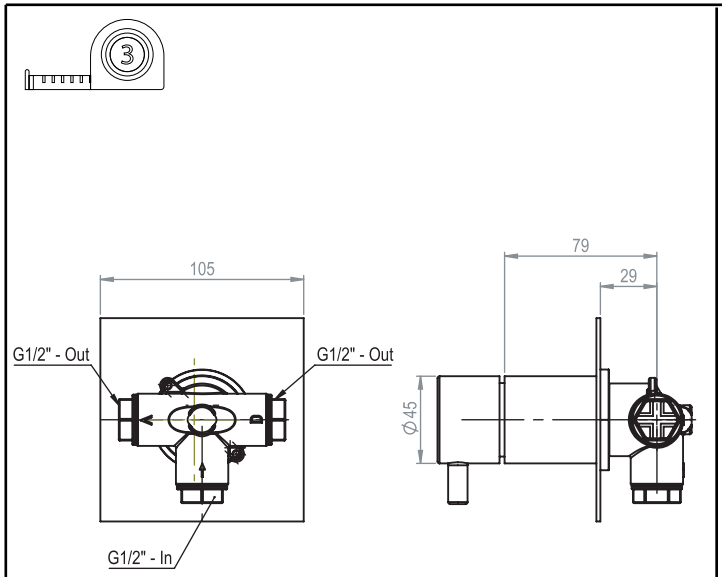
105
G1/2" - Out
G1/2" - Out
G1/2" - In
79
29
Ø45

1

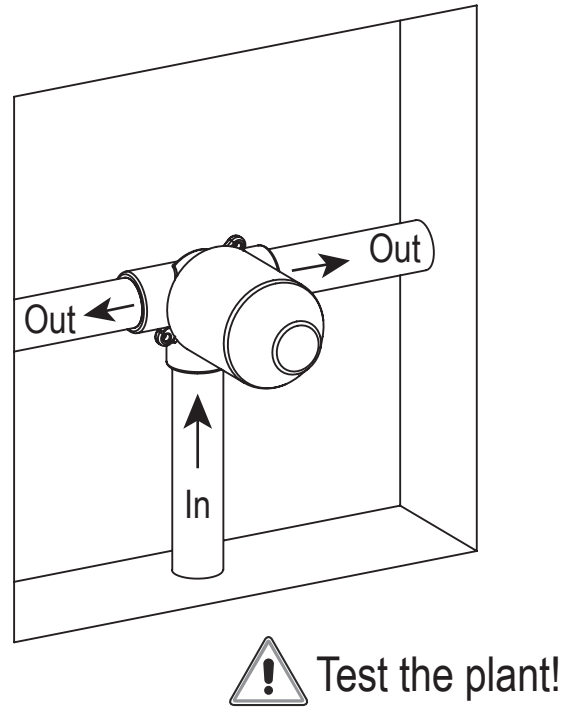
Out
Out
In
Test the plant!

2

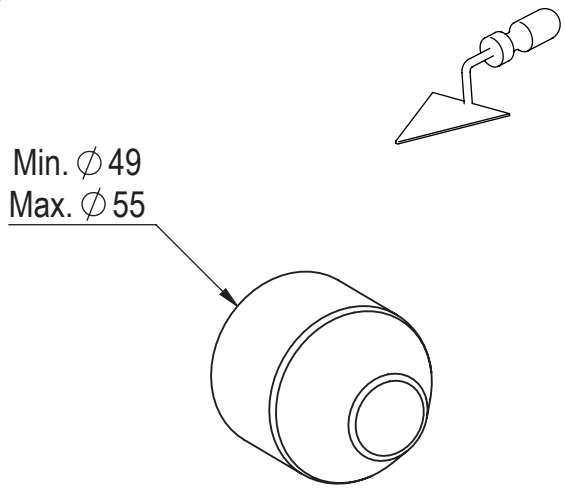
Min. Ø 49
Max. Ø 55

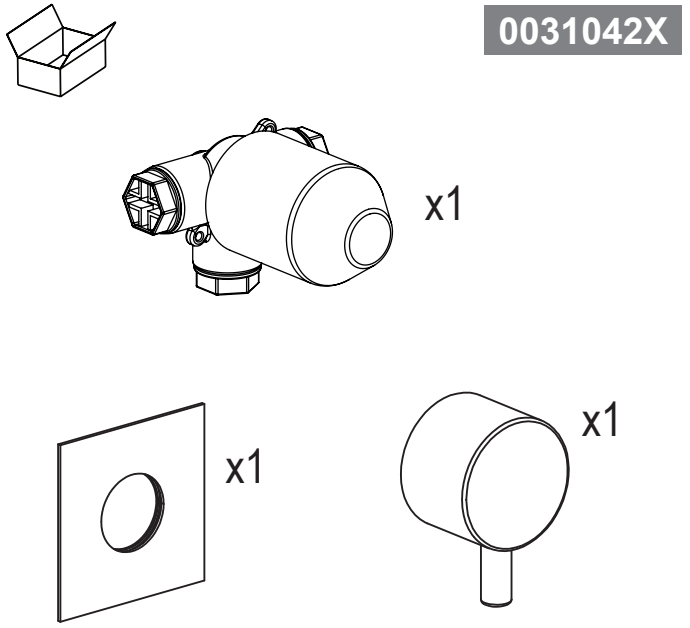
0031042X
x1
x1
x1

3

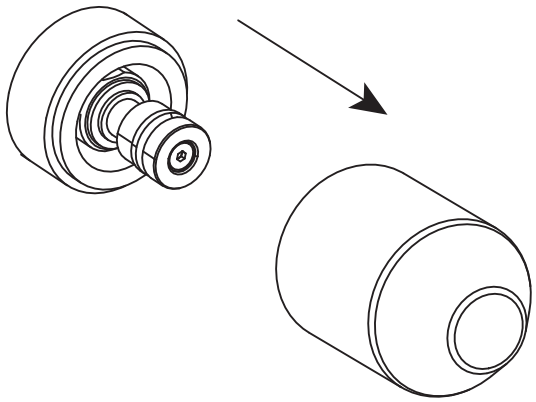

4

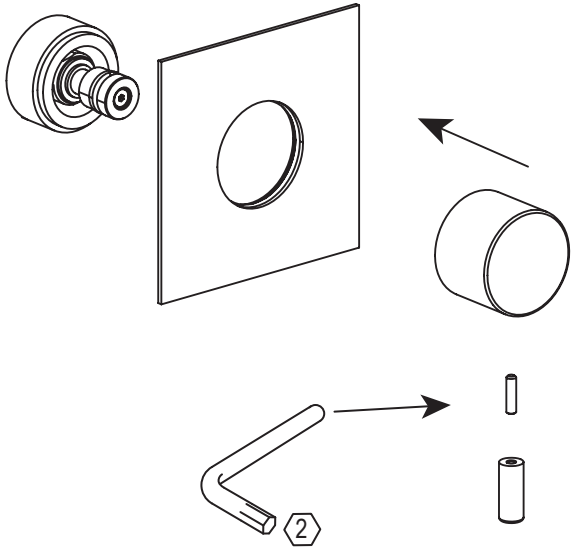
2